CONFIDENTIAL
Property of
Eagle Stainless Container

TOP VIEW

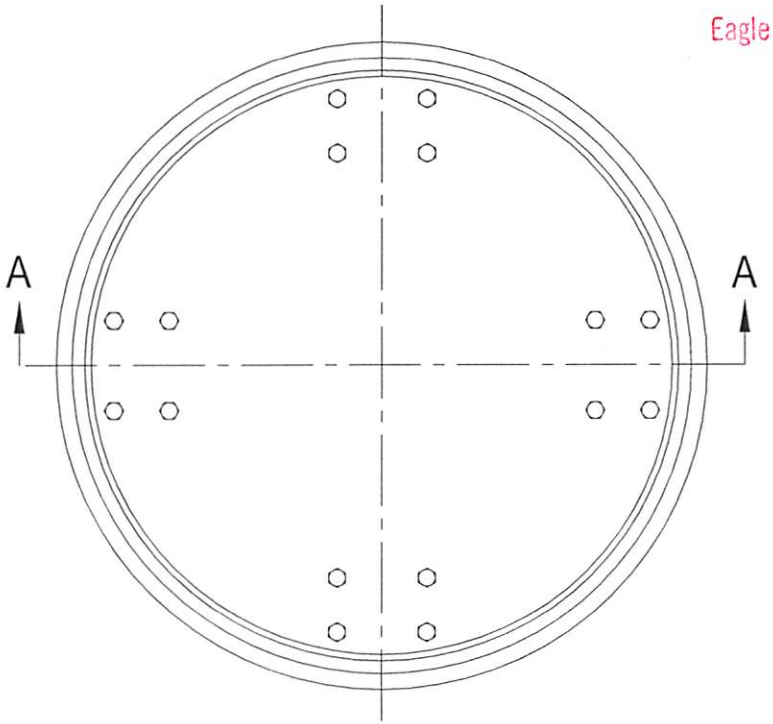

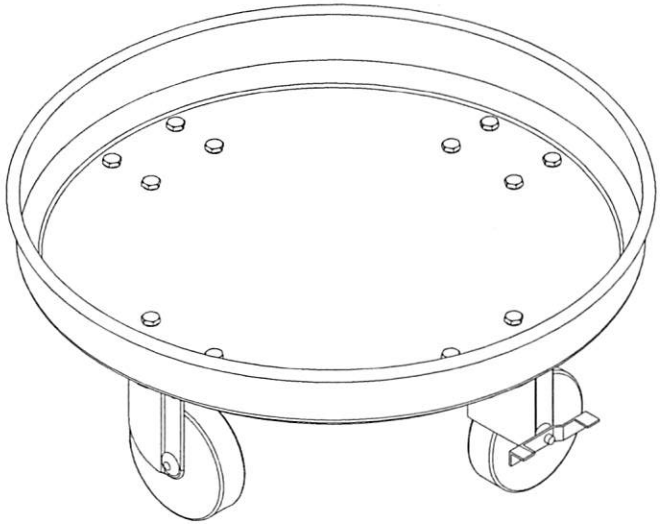

* MATERIAL of CONSTRUCTION --- T-304-SS
* MATERIAL of CASTERS --- STAINLESS STEEL
* MATERIAL of WHEEL --- WHITE NYLON URETHANE
* DOLLY HAS FOUR SWIVEL CASTERS, TWO with BRAKES

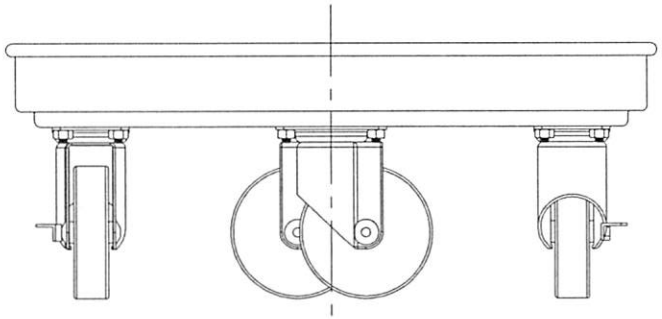

FRONT VIEW

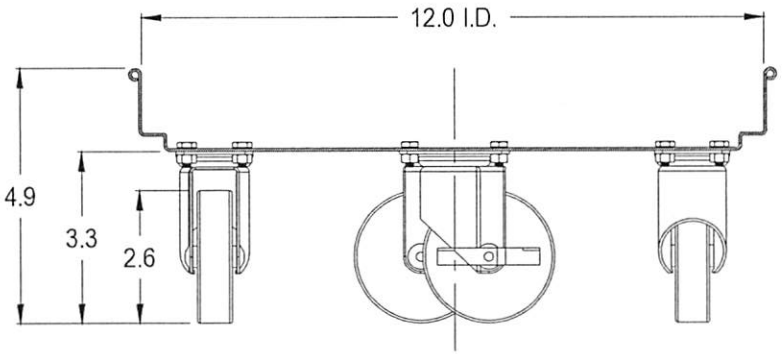

A-A SECTION VIEW

PROPERTY OF ESC. DO NOT DUPLICATE OR DISTRIBUTE.

EAGLE STAINLESS
816 NINA WAY
WARMINSTER PA 18974
TEL# : 215-957-9333
FAX# : 215-957-9330
www.eaglestainless.com

Customer and/or Vendor agrees to keep confidential the contents of any documents and materials including but not limited to Quotation(s), Invoice(s), Purchase Order(s), and Drawing(s) that Eagle Stainless provides to Customer and/or Vendor and acknowledges that they are trade secrets of Eagle Stainless. Customer and/or Vendor agrees to indemnify Eagle Stainless for all damages (including all attorneys' fees and costs incurred) in connection with any unauthorized use or disclosure of such confidential information by any of Customer and/or Vendor's employees or agents.

DRAWING#	: KMSSC30A-1-01A
MATERIAL	: See Note on Drawing for Detail
CAPACITY	: N/A
FINISH	: N/A
MODEL #	: KM-SSC-30 DOLLY

DRAWN BY : BEN S. KWON	DATE : 02/13/2018
(1) APPROVED BY :	(2) APPROVED BY :
NOTE : ALL DIMENSIONS ARE INCHES.	
DO NOT SCALE.	
APPROVED BY (CUSTOMER SIGNATURE) :	

TOLERANCES UNLESS OTHERWISE SPECIFIED	
THREE PLACE DECIMAL	+/- .010"
TWO PLACE DECIMAL	+/- .125"
ONE PLACE DECIMAL	+/- .250"
FRACTIONS	+/- 1/32"
ANGULARITY	+/- 1/2 deg.
RADIUS	+/- 1/32" - .031"